Technical Specification

Stationary Sampler



PP 2002+
PP 2002E
PP 2002M

WARNING!!!
READ THIS INSTRUCTION MANUAL BEFORE USING THE DEVICE

Manufacturer:

POL-EKO sp.k.

Ver 3.01

2024.04.25

PN-EN ISO 9001
ISOCERT CERTYFIKAT

TABLE OF CONTENTS

1 SAFETY PRECAUTIONS 4
2 ENVIRONMENTAL PROTECTION AND UTILISING THE DEVICE 4
3 USE DEVICE 5
4 BEFORE FIRST START-UP 6
5 DESCRIPTION 7
6 OPERATION 8
6.1 Determining sample volume 8
6.1.1 For the device with a peristaltic pump 8
6.1.2 Device with vacuum feeder 8
6.2 Using the control panel 9
6.2.1 MENU screen 10
6.2.2 Bottle Status screen 10
6.2.3 Input state screen 10
6.3 SD memory cards (optional) 11
6.3.1 Preparing the memory card 11
6.3.2 Using stored data 11
6.4 Replacing bottles 11
6.5 Settings Menu – Sampler parameter settings 12
6.5.1 Valve 12
6.5.2 Sample taking 12
6.5.3 Display 12
6.5.4 Clock 12
6.5.5 Inputs range 13
6.5.6 Save time (applies only to samplers with SD memory card slots) 13
6.5.7 MODBUS 13
6.5.8 Defrost 13
6.5.9 Cool 13
6.5.10 Password 14
6.5.11 Language 14
6.6 Modbus protocol 14
7 PROGRAMMING SAMPLER OPERATION 15
8 SAMPLER VIEWER – Instruction manual 18
8.1 Technical requirements 18
8.2 Installation of the program 18
8.3 Type of files on the SD card 18
8.4 How to use the program 19
8.4.1 Settings of the program 19
8.4.2 Opening the file 19
8.4.3 Creating a chart 20
8.4.4 Creating the report 20
9 CLEANING AND MAINTENANCE INSTRUCTIONS 21
9.1 When the device is not used for a long period of time 23
9.2 General rules for cleaning and maintenance of stainless steel 24
9.3 Consumables 25
10 TROUBLESHOOTING 26
10.1 List of error messages 26
10.2 Exceeding the recommended ambient temperature 27
11 TECHNICAL DATA 27
12 RATING PLATE 28

13 ADDITIONAL INFORMATION....28
13.1 Modbus memory registry map....28
13.2 Connection diagram....30
13.2.1 Block diagram....30
13.2.2 Electric diagram....30
13.2.3 Clamp connections....31
14 WARRANTY....32
15 TECHNICAL DRAWINGS....33
15.1 PP2002+....33
15.2 PP2002E....34
15.3 PP2002M....35
16 DECLARATION OF CONFORMITY....36

1 SAFETY PRECAUTIONS

	To ensure your own safety as well as correct operation of the device you must adhere to the hints included in this instruction manual, especially those marked by warning symbols. The manufacturer cannot take any responsibility for damage resulting from not following instructions included in this manual.

	**In this way are marked with the correct guidance to help operate the device**

To ensure a long and safe operation of the device you must observe the following basic rules:

1.	**<u>You must not install the device:</u>** • in explosive atmosphere, • on an uneven and unstable surface,
2.	**<u>You must not:</u>** • touch live parts, • operate the device with wet hands
3.	**<u>You must:</u>** • use only earthed power sources (to avoid electrical shock), • to disconnect the power cord from the power supply always hold the plug, not the cord, • before moving the device, always disconnect the power plug, • protect the power cord and plug from damage, • before undertaking any repairs or conservation work disconnect the power supply, • if the device has sustained visible damage, turn it off and protect from further operation.

2 ENVIRONMENTAL PROTECTION AND UTILISING THE DEVICE

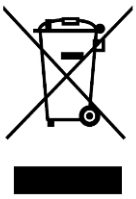

The packaging protects the device from damage during transport. Materials used for the packaging are not dangerous to the environment and can be recycled. Please dispose of the packaging in a sustainable way or recycle it. The device has also been made of materials which can be recycled at the end of the working life of the device, to recover precious materials. The device is marked in accordance with the 2012/19/EU Directive (waste electrical and electronic equipment – WEEE2). The directive regulates the conditions of returning and recycling of used devices valid in the whole European Union.

Please protect the environment in which we all live!

We would like to stress that we have made every endeavour to make the device reliable over a long working life and meet all your expectations. We welcome any suggestions regarding the operation of the device or adding new functions, to ensure continuous improvement of our products. Please visit our website www.polekolab.com

3 USE DEVICE

Monitoring station and stationary sampler are allocated to collect fluid substances at a temperature from 0°C to 60°C in the area not threatened with explosion. The device is equipped with a microprocessor controller which provides time proportional, flow proportional and event sampling method (option).The volume of a sample can be adjusted by calibrating the capacity of the sample. The sample is poured to the bottles (or a bottle) which are located in the lower chamber. Collected samples are stored in a thermostatic chamber, in which the temperature is kept at a constant level - 4°C. It slows down biological decomposition process of these samples.
The device is made of acid resistant steel, which effectively makes it weatherproof and enables to perform works in the open air. PP2002M version is equipped with jack SD memory cards (in PP 2002+ stationary sampler SD memory card is optional). Each card is used to save information concerning sampling and measuring. The device can be connected to RS-485 main and can communicate with computer using optional MODBUS protocol.

Depending on the way in which samples are collected, the device is available in three versions:

- with a peristaltic pump - the possibility of collecting samples with different volume depending on e.g current flow (flow proportional)
- with a vacuum dispenser - the possibility of sampling with different volume which is equal to the volume of vacuum dispenser vessel (or its multiple). It is characterized by great accuracy in volume of collected sample. The volume of a sample can be adjusted in the range from 30 to 250 ml. It is adjusted mechanically.
- with a vacuum dispenser (the possibility of collecting samples with different volume) - the volume of a sample can be adjusted by the dispenser or can be set in the range from 100 to 250ml (for proportional temporal programme) accurate within ±10% (the minimal collected sample resulting from the temporary flow can not be smaller than 70ml). This solution requires a long-term attention to cleanness of electrode assembled in dispenser vessel as well as in the inlet of the vessel. Maintenance works will have to be frequently carried out.

4 BEFORE FIRST START-UP

The device is delivered protected with cardboard profiles and foil. The device must be transported in an upright position, and the parcel must be protected from sliding during transport.

	It is strongly advised to check the visual state of the device and equipment in the presence of the person delivering the parcel. The courier is responsible for any damage sustained during transport.

The sampler is suitable for operation both indoors and outdoors.
The device can be used in areas meeting the following requirements:

- ambient temperature: from -20°C to +45°C,
- it is advised to place the sampler near the sampling location,
- the sampler should be positioned so that the entire length of the suction hose is sloped, to prevent accidental clogging with sediment from collected samples or freezing of samples left in the hose,
- the device should be placed on a solid, stable surface (a concrete foundation in case of outdoor installation),
- installing the unit near caustic fumes is not recommended,
- dimensions of the mounting surface (in mm): 950 x 950 x 300

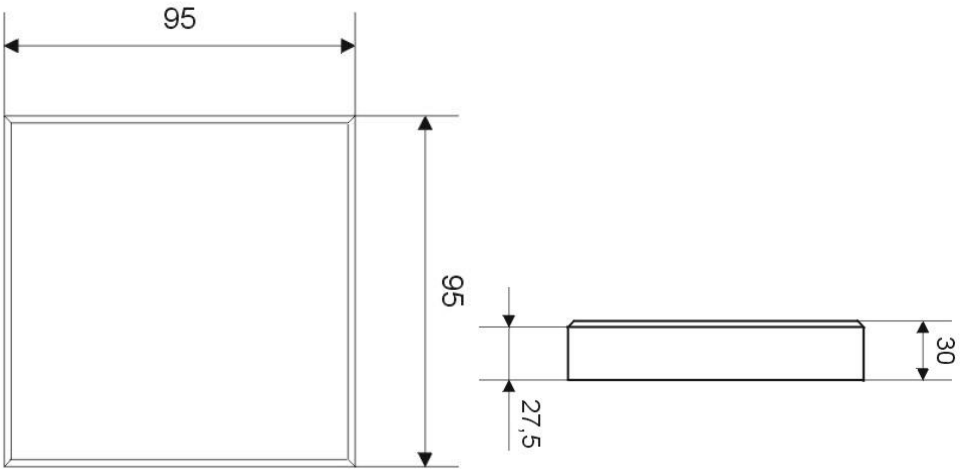

- the device should be placed with a distance of at least 20cm between the sides and any building walls, to ensure proper ventilation of the device,
- the device should be situated in a place to which the access will not be hindered to carry out the maintenance work. Directly above the device should be at least 70cm of elbowroom.

	A particulate filter has to be installed at the end of the suction hose. You must not allow a complete clogging of the filter. It needs to be regularly checked and cleaned.

- the device is equipped with a 5 m power cord with a plug, you must prepare a power point with a 230V socket in the planned location of the sampler,

	The device is powered by 220-240VAC/50Hz. It needs to be connected to an earthed electrical socket to prevent an electrical shock in case of a fault of the sampler.

5 DESCRIPTION

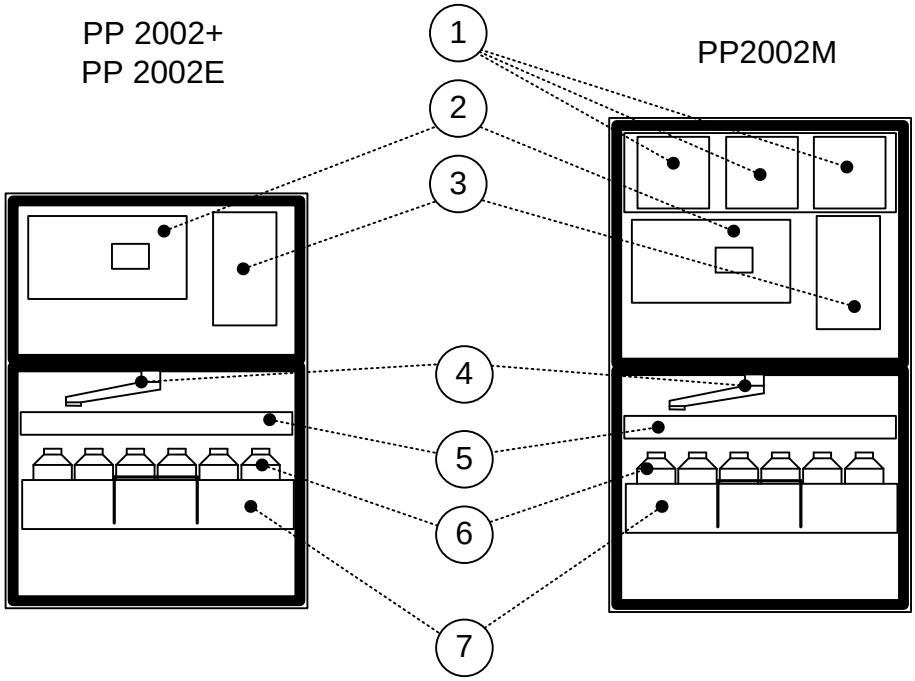

The following are important elements of sampler

(1) Optionally measuring instruments (pH, conduction, oxygen gauge)
(2) Control panel
(3) Peristaltic pump or vacuum dispenser - depending on a version
(4) Rotary distributor
(5) Distributor tray
(6) Bottles for samples
(7) Bottle tank

The sampler is made up of two main units:

1. Bottom chamber:
It's used to store the taken samples. Depending on the version of the machine the tests can be stored in: 24 bottles with the content of 1l, 12 bottles with the content of 2,9l, 4 bottles with the content of 10l or 1 bottle with the content of 25l in constant temp. +4°C, regardless of the external conditions.
It is fitted with a fan, that improves the thermostatic properties of the chamber.

2. Top chamber: Divided into 2 separate parts:

- Front Part – includes control panel used to operate the machine using an LCD and 6 function keys, contains electronic circuits and electromechanical control circuits, peristaltic pump or vacuum dispenser and measuring instrument in the upper part (for PP 2002M), heaters preventing samples from freezing during collection
- Back Part – includes sample collecting pump (in version with vacuum pump), a cooling-heating system made up of a compressor, condenser, heater, fan,

A block diagram describing the connection of particular components is shown in point 13.2.1,

6 OPERATION

⚠	You should not store in the bottom chamber objects that are not part of the sampler or its accessory, as this could disturb proper air circulation in the chamber and reduce temperature stability of sample storage.

6.1 Determining sample volume

⚠	**A sample during calibration is poured into the bottle no. 1. Before the calibration is started it is required to ensure that the bottle no. 1 is empty.**

6.1.1 For the device with a peristaltic pump

The number of collected sample can differ depending on collected substance and the height of suction. If previously established volume of collected sample is inadequate, the calibration must be carried out. The volume of a single sample is set in ***MENU*** -› ***Settings*** -› ***Sampling*** -› ***Calibration***. A sample during calibration is collected to the first bottle, before the calibration is started it is required to ensure that the bottle is empty.

After entering the **Calibration** window the user must confirm it by pressing ↵ which makes the calibration active. In the initiative phase of calibration, a suction hose is blown through. Then the sampling starts. During the sampling it is required to observe the amount of collected sample. If it turns out that the amount is sufficient the sampling should be interrupted by pressing ↵. On the screen the dosing time of the amount of standard sample will be displayed. By pressing ↑ button the user leaves the **Calibration** window , maintaining the new settings of dosing time.

6.1.2 Device with vacuum feeder

In the upper chamber of the sampler, there is a vacuum feeder, picture of which is shown below.

(1) Suction hose
(2) Sealing shoulder
(3) Electrode
(4) Dosing tube
(5) Valve



The sample volume is determined by a dosing tube. To set the volume, you need to take the tube out or put it in the vessel.

6.2 Using the control panel

Panel consists of the following components:

- LCD Display
- Multifunction keys
- SD slot (optional)

Control panel operation Multifunction keys located next to the display are used to operate the control panel and the device. The current function of each key is indicated by a word or symbol next to it.

Below you can find a list of some of the basic graphic symbols.

Symbol	Key's name	Function
	Exit key	leaving the current position of the menu or leaving a submenu without storing changes
	Enter key	entering a menu position or confirming changes made
	Up/Down keys	moving the cursor when setting new parameters, values, etc.
	Right key	moving the cursor when setting new parameters, values, etc.
	Plus/Minus keys	changing the value of the position indicated by the cursor

After turning on the device the display shows the type of the device and its manufacturer, followed by the status screen.

If the symbol is shown, it indicates a failure of the device or a power cut during its operation. For more information see 10.1 Error messages.



If the device is equipped with an optional SD memory card slot, a '***NoSD***' message indicates lack of an SD card in the slot. Result back-up on the memory card is impossible.

If a programme is active the status screen displays information about active tasks in the programme. If a sample is being collected, the display reads '***Sample according to task***', followed by the number of the current task.

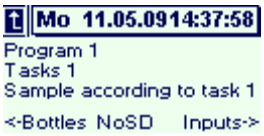

Additionally in status window you can find information about next try for the 1 task :

- For time task – what time will be next withdrawal
- For quantitatively-digital task – how many pulse was measured/ released amount of pulse
- For quantitatively-analog task – what was the measured flow / released volume

From the status screen you can enter:

- ***MENU*** by pressing the button
- information on bottles in the sampler pressing the ***Bottles*** key,
- information on analogue inputs and digital transducers through the ***Inputs*** key.

6.2.1 MENU screen

By pressing button the ***MENU*** screen is available. keys allow browsing through menu options. Enter the selected submenu by pressing the key.



Description of MENU functions

⇒ ***Control***
- Start program – starting the selected program (when a program, it is Stop Program)
- Take a sample - collecting a single sample to a selected bottle
- Exchan. bottles - changing bottles with samples

⇒ ***Programs*** – editing and creating new programs of the sampler (see 7. of the manual)

⇒ ***Settings*** (available after typing the User code) (see 6.5 of the manual)
- Valve (in version with vacuum feeder) – setting the working parameters of the Valve
- Sample taking – setting working parameters of sample collection
- Display – settings of illumination and contrast of the display Clock
- Inputs range – setting analogue input parameters (measuring range, measurement units)
- Save time (only when the device is fitted with an SD card slot) – setting the frequency of storing information on the SD memory card
- MODBUS (for units equipped with a Modbus protocol) – setting the parameters for Modbus transmission
- Defrost – adjustment defrost parameters, manual switch of defrost
- Cool – possible choice the mode of working of the temperature maintenance system in the samples' chamber
- Password – changing user password
- Language – changing the menu language

⇒ ***Information*** – viewing the version and date of the controller software, checking the temperature inside the sample chamber

6.2.2 Bottle Status screen



Pressing the ***Bottles*** key in the Status screen brings information about bottles. A full bottle symbol indicates a properly filled bottle. The symbol of a closed half-full bottle indicated a bottle with samples which has been filled with at least one erroneous sample.
It can mean not filling the bottle in tasks with bottle time set (f.e. 8 collection to the bottle was set , bottle time – 1 hour, and in 1 hour only 6 tests was taken correctly)
Not capped bottle with number inside means this bottle is currently filled.
A number in a bottle indicates the number of collected samples, the bottle is not full yet.

You can selected the desired bottle by pressing and . Below the key is shown the number of the selected bottle (in the example above it is '3').
The symbol of the selected bottle pulsates.

By pressing you can see information on the selected bottle.

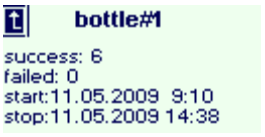

This includes:
Number of correctly collected samples,
Number of incorrectly collected samples,
For event tasks – the number of the event that initiates collecting to the bottle is displayed.

Button Allows to change the bottle direct in their information screen.

Pressing returns to the Bottle Status screen.

button starts the procedure of replacing bottles. Replacing bottles procedure has been described in point 6.4.

6.2.3 Input state screen

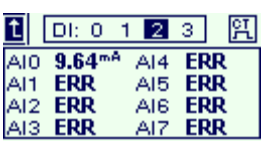

After pressing the Inputs key the Status screen will show information on the state of analogue and digital inputs. The top part of the screen shows the state of digital inputs (DI). If an active signal appears on one of the digital entries, the corresponding digit will be highlighted (the example screen shows the "2" input active. The top right-hand corner presents the condition of CT input (counting) of analogue-to-digital

module . It lights up after sending the digital signal to CT input. Below you can find indications regarding analogue inputs (AI).
If an input has been configured for a specific probe the value is shown in selected units (input configuration is described in 6.5.5). Otherwise the display shows the value of the current coming to the analogue input. If "***ERR***" is displayed it means that the current is not in the range of 4-20mA.
Such an input might be not connected or incorrectly configured.

To return to the Status screen press the key.

6.3 SD memory cards (optional)

Sampler can be equipped with an SD memory card slot. You can store information on the operation of the device on the card. If no card is present in the SD slot in the control panel, '***NoSD'*** is displayed on the Status screen. To be able to store data on the SD memory card, place it in the slot in the control panel in a way that is shown in the picture on the right. Slowly push the card into the slot until you hear a click of locking the card in the slot. To remove the card you need to press it. When pressed the card should slide out enough for you to pull it out. If the device emits an audible error signal after placing the memory card, it means it is not ready to store data (it is incorrectly formatted).

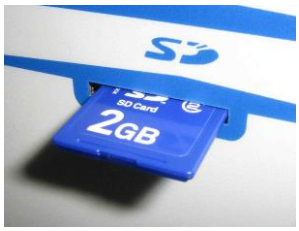

	The memory card should be replaced every 3 months to avoid losing stored data. You can also copy stored data and then format the card. Data might not be stored on the memory card after 3 months.

6.3.1 Preparing the memory card

New memory cards are usually ready to store data. If the sampler emits an audible error signal after placing the memory card, you have to prepare it for storing.
In the case of SDHC cards with capacity of 4GB and larger formatting should be done in the stationary sampler. After inserting the card reader, in the menu 'Settings' select 'SD - Format' and follow the formatting of the card to the FAT16 file system.

In case of SD cards with capacity 2GB and smaller formatting should be done in a stationary sampler or use PC with SD card port or external card reader with USB socket which will be connected to the PC.
To do this you can use a computer with an SD slot or an external USB memory card reader connected to the computer. The card needs to be formatted in the FAT16 file system, otherwise it will not be recognized by the sampler.

Below is the description of formatting an SD card in the Windows XP operating system.
1) In 'My Computer' right-click the memory card icon (e.g. Removable Disk F:). Select the 'Format…' option
2) Select the FAT file system and click 'Start'

	Formatting will erase all data stored on SD card! Please make sure that all content saved on the data storage can be delete.

6.3.2 Using stored data

The SD memory card allows to record operating parameters of the sampler. For more information see point 8.3.

	The SD card formatted in the unit should only be used to store the data in the unit or transfer it to the PC.

6.4 Replacing bottles

The bottom chamber contains a tank with bottles. When the bottles are filled up the programme stops sample collection. That is why the state of the bottles needs to be monitored using the Bottle Status screen, described in 6.2.2. Once the bottles are filled up with samples, they need to be replaced with new ones.

	Before removing the bottle tank, you need to remove the distributor tray located directly above the bottles in order to avoid damaging the tray. The tray is not available in a version with one or four bottles.

After removing the tray, remove the whole tank using provided handles. After replacing the bottle tank, reset the bottle status in the controller memory. This can be done in two ways:

- if the status screen is active press the Bottles key to enter the bottle information screen and press the key. Confirm by pressing the key.
- the option is also available in MENU -> Control -> Exchan. Bottles

'Bottles changed' on the display indicate that the bottle data has been deleted.

6.5 Settings Menu – Sampler parameter settings

You can set the sampler's parameters in the ***Settings*** submenu located in the main ***MENU*** (see 6.2.1). You can enter the ***Settings*** submenu after typing the User code (555 by default).
Options available in the Settings submenu:

6.5.1 Valve

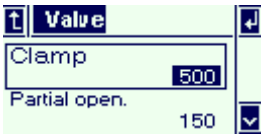

The valve settings menu can be found in devices equipped with vacuum dispenser. Setting working parameters of the Valve located behind the vacuum feeder:

- Clamp – setting the pressing force with the valve completely closed
- Partial open. – Setting the pressing force with a partly open valve. The valve is partly open after a sample has been sucked in, to avoid a violent flow of samples to the bottle.
- Delays – time of the partial opening of the valve

6.5.2 Sample taking



Setting working parameters of sample collection

- Initial blow – Amount of time for blowing air from the suction hose
- Rinses no. 1 – (function available for peristaltic pump sampler) – determines the number of rinses of the suction hose before taking the sample
- Suck – Amount of time for sample collection (if the sample has not been taken by that time, it is signaled by the sample collection error)
- Final blow – Amount of time for blowing air from the suction hose after sample collection
- Rinses no. 2 - (function available for peristaltic pump sampler) – determines the number of rinses of the suction hose after taking the sample)
- Pour out – Amount of time for pouring the sample from the vacuum feeder to the bottle, starting from the full opening of the valve
- Calibration - (this function is not available in version with a vacuum dispenser) - determining the dosing time of one sample - the volume of a sample. Progress of calibration for particular versions of devices has been described in point 6.1.

6.5.3 Display



Settings of illumination and contrast of the display.

- Illumination can be set to permanent (illumination will be active all the time the sampler is active) or temporary (illumination will be active for 60 seconds after pressing a key on the panel)
- Contrast level can be set depending on lighting conditions in the specific location

6.5.4 Clock

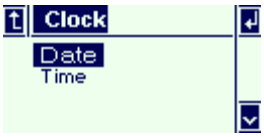

Setting current date and time.

Press the key to highlight the position you want to change. Change the selected position using and keys. Press to confirm new settings. You can adjust date and time settings only when no programme is running.



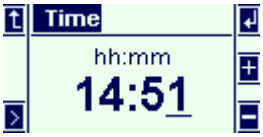

	**You can adjust date and time settings only when no program is running.**

6.5.5 Inputs range

Setting analogue input parameters (measurement range, measurement units) Analogue inputs enable reading the value of current coming to the input. The electrical current value for the measured current loop is in the range of 4-20mA. For each analogue input you can set the unit as well as the range corresponding to the connected probe. You can select from the following units:

pH, °C, mS/cm, µS/cm, S/cm, m^3/h, mV, g/l, mg/l

For m^3/h value 4mA determines zero flow.

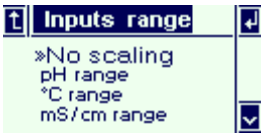

6.5.6 Save time (applies only to samplers with SD memory card slots)

Setting (in minutes) how often data (reports) is to be saved on the SD memory card More information on storing data on the memory card can be found in 6.3



	**Having changed the storing parameters place a new memory card in the slot (or format the existing one, after copying the data) to avoid deletion of previously stored data.**

6.5.7 MODBUS

Setting of parameters for Modbus transmission. The device can send and receive data using MODBUS-RTU. Window only available for devices with an optional Modbus.

- Address - allows you to change the device address
- Quatity of Stop bits
- Baud Rate - to change the baud rate

Modbus protocol is described in detail in point 6.6

6.5.8 Defrost

Because of storaging in the machine collected samples that evaporate, chamber frosting is possible. The frost collection can reduce the efficiency of cooling system, and this way the machine can have problem with providing recommended temperature in bottom chamber.
The machine was equipped in automatic defrosting function. It is activated automatically once a day between 3 and 4 o'clock. During defrosting process the fan in samples chamber is turned off.

Defrost time [1-20 min] – can be set as needed. The power should be increased if there is still frost in the chamber despite of defrosting. When the temperature after defrosting is too high then the time should be decreased.

Defrost delay [1-10 min] – determines time between end of defrosting and start of cooling.

Defrosting can be also turned on manual. In that case choose **Defrost –> Do it** and accept it with the button  .

During defrosting on the status window there is symbol {^}.

6.5.9 Cool

If there is no collected samples in the machine the stable temperature +4°C is not needed.
After choosing function **ECO** the temperature inside chamber can be 2°C÷30°C (the cooling system operates and keeps the temperature within 20°C÷30°C, when the heating system keeps the temperature within 2°C÷6°C)

If the **ECO** function is activated on the status window you can see the information {ECO}. It is activated until the first try is taken. After the first try is taken by the sampler the maintaining temperature system starts operating in normal mode (constant temp. +4°C). If the **ECO** function wasn't turned off earlier it will activate again after bottles exchange.

After choosing function **Always** temperature is maintained constantly at +4°C.

6.5.10 Password

The Settings menu is protected by a User password to prevent accidental changes made to the sampler's parameters by unauthorized personnel. The password can be changed only after confirming the exiting one.



6.5.11 Language

Enables changing the language of the menu and information displayed on the screen.

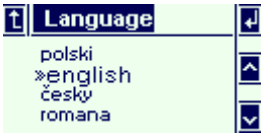

6.6 Modbus protocol

The unit may be optionally equipped with Modbus-RTU data transmission using the RS-485 port. It enables the data to be sent to large distances (up to 1200m) thanks to a twisted-pair wire.

Transmission parameters

Baud Rate	Data Bits	Parity	Stop Bits	Unit's address
Configurable *	8	N	Configurable *	Configurable *

*) The unit's address, quantity of Stop Bits and Baud Rate may be set in ***MENU*** -> ***Settings*** -> ***MODBUS*** (point 6.5.7).
Every register consists of 2 bytes (Byte Hi and Byte Lo).
Used commands:

- 0x03 Read Holding Registers
- 0x06 Write Single Register
- 0x10 Write Multiple Register

To reduce the occupation of the bus, only 16 registers can be obtained at a time.
The correctness of the transmission is checked by a CRC check sum control

The map of registers memory can be found on page 12.1 of this instruction manual.

7 PROGRAMMING SAMPLER OPERATION

Sampler's operation can be programmed using the LCD and six multifunction keys located in the top chamber of the sampler. There are five programmes possible to be set up. Each program can have up to eight tasks. Tasks define situations in which samples are to be taken.

Tasks are divided into seven groups:

Type of task	Description of the task (when samples will be collected)
time	After a previously set time
quantity dig.	After a set number of impulses occurs at the CT impulse input
quantity an.	After measuring a set volume
event dig.	After an impulse occurs at a defined digital input
event an.	After an analogue signal with set parameters occurs
time-flow prop.	Every established amount of time. Sample volume is proportional to temporary flow value reported during sampling (it is not available in the version with a vacuum dispenser).
MODBUS	After set „1" in register #100. **After interpreting command register 100 is automatically set on „0".** Available in device with Modbus protokol.

You can programme the sampler using the programming menu. In ***MENU*** select the ***Programmes*** submenu. The controller will ask for the user code. The default user code is 555. You can type it using the +, −, › keys. Confirm by pressing the ↵ key.



The device will then ask for the number of programme to be edited. You can select from five independent programmes. In the same way you choose the task number you want to edit.





Task number is important because when running the programme tasks with lower numbers have more priority

For example: if during executing task #2 occurs an event from task #3, it will be executed only after task #2 is finished. On the other hand, when a sample is being collected from task #3, task #4 is waiting and an event from task #2 occurs, the device will go to task #2 after finishing task #3 and eventually to task #4.

After selecting the task to be edited, you are shown previously defined parameters. The task number of the specific programme is displayed in the upper part of the display to help edit the programmes. If a task has not been previously edited, '***none***' is displayed in the Task field.
By setting in task field option „**none**" the earlier set task is canceled.

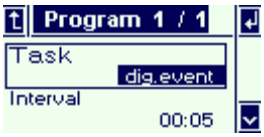

Use ↓ and ↑ keys to select the parameter you wish to edit and confirm by pressing ↵. Samples resulting from the given cyclical task are collected until all the bottles defined for the task are filled. No more samples are collected after the bottles are full.
To resume sample collection replace bottles (this has been described in 6.4).

Each task type has specific parameters:

Parameters	Time	Quantity dig.	Quantity an.	Event dig.	Event an.	Time-flow prop.	MODBUS
Interval	+			+	+	+	
Samp. per bottle	+	+	+	+	+	+	+
Multiplicity ***	+	+	+	+	+	+	+
Bottles	+	+	+	+	+	+	+
Repeatability	+	+	+			+	
Delay *	+	+	+			+	
Bottle time		+	+				
Impulses		+					
Input			+	+	+	+	
Sampling every			+				
Time protection		+	+				
Start date	+**	+**	+**	+	+	+**	
Fill				+	+		
Start delay				+	+		
Stop delay				+	+		
Lower limit-act					+		
Upper limit-act.					+		

*) With no cyclicity
**) With cyclicity set to daily or weekly
***) For devices with a peristaltic pump available only for Event dig. tasks (PP2002 E)

- Interval [01min-99h 59min] - defines the frequency of sample collection.
- Samp.per bottle [1-99 (version with 24 or 12 bottles, 1-250 (version with 4 bottles), 1-999 (version with one bottle)] - defines how many samples are to be collected into a single bottle.
- Multiplicity [1-40] – device equipped with vacuum feeder: defines the capacity of a single sample. For example: setting this parameter to 4 will result in one sample having the capacity equal to the quadruple capacity of the vacuum feeder

  Device equipped with a peristaltic pump: determines how many times the basic sample set during calibration will be taken. For example, in the case of sampling, a multiplicity of 4 would be 4 times the basic sample. ATTENTION! This should be consider so that the bottle does not get overfilled.

- Bottles[1-24] – defines which bottles are to be filled with samples when a specific task occurs
- Repeatability [none, daily, weekly] – defines the periodicity of the task: whether it will be run only once, every day or every week
- Delay[01min-23h59min] – (when no cyclicity is set) defines the period of time from the start after which samples are to be collected
- Bottle time [00min-24h00min] – time after which bottle to be filled with samples will be changed
- Impulses [1-999] – defines the number of impulses occurring at the CT impulse input after which a sample will be collected (only with the Event digital task)
- Input [8 analogue or 4 digital inputs] – defines active inputs

- Sampling every [m^3] – sample collection can depend on information from installed flowmeter. In previous parameter “Input” . You should define where the flowmeter is connected (this parameter occurs only for quantitatively-analog task)

- Time protection – (Only for quantitatively-digital and analog task) This parameter shows how often the sample should be taken apart from the status of chosen analog or digital inputs. Choosing the value 00:00 deactivates the time insurance.

- Start date – defines date and time when an event is to be checked. Turning on cyclicity allows performing a task at a specified time every day or every week
- Fill

  ⇒ singly: during each event the bottle is filled until it is full. If the event is still happening after the bottle is full, sample collection is terminated and the next samples won’t be taken

  ⇒ seperately: the program fills consecutive bottles until the end of the event. If a new event occurs the sample will be poured into the next empty bottle, the bottle with the previous sample will not be filled up

- Start delay [1sek.-99min.59sek.] – (for event analogue and digital tasks) defines the time between an event and sample collection
- Stop delay [1sek.-99min.59sek.] – (for event analogue and digital tasks) defines how long a task will be active after an event stopped. It is possible to collect samples during this time.

- Lower limit - act. – only with analogue event tasks, defines the minimum value on a given analogue input, which will trigger sample collection. The value is set using 'lower limit-val.' and 'lower limit-hys.' parameters (value and hysteresis)
- Upper limit – act. – only with analogue event tasks, defines the maximum value on a given analogue input, which will trigger sample collection. The value is set using 'Upper-val.' and 'Upper-hys.' parameters (value and hysteresis)

Below is an example which will enable setting parameters in such a way to collect samples when the analogue input value is within a certain range

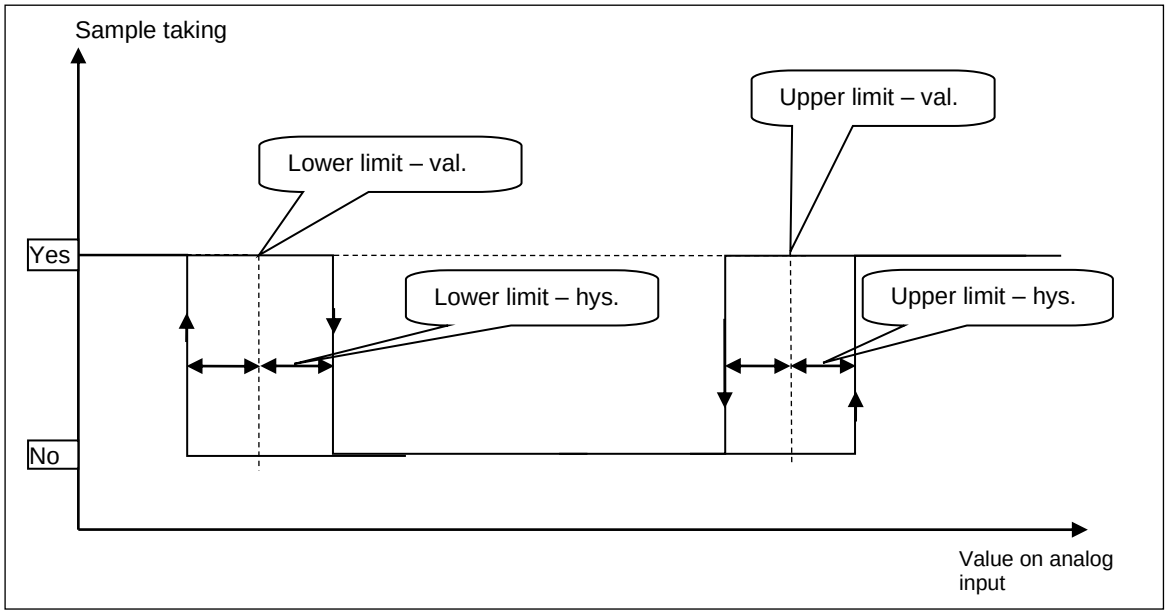

Example: In the example below you can see how to programme sample collection for a task – every 2 hours into bottles 1-16

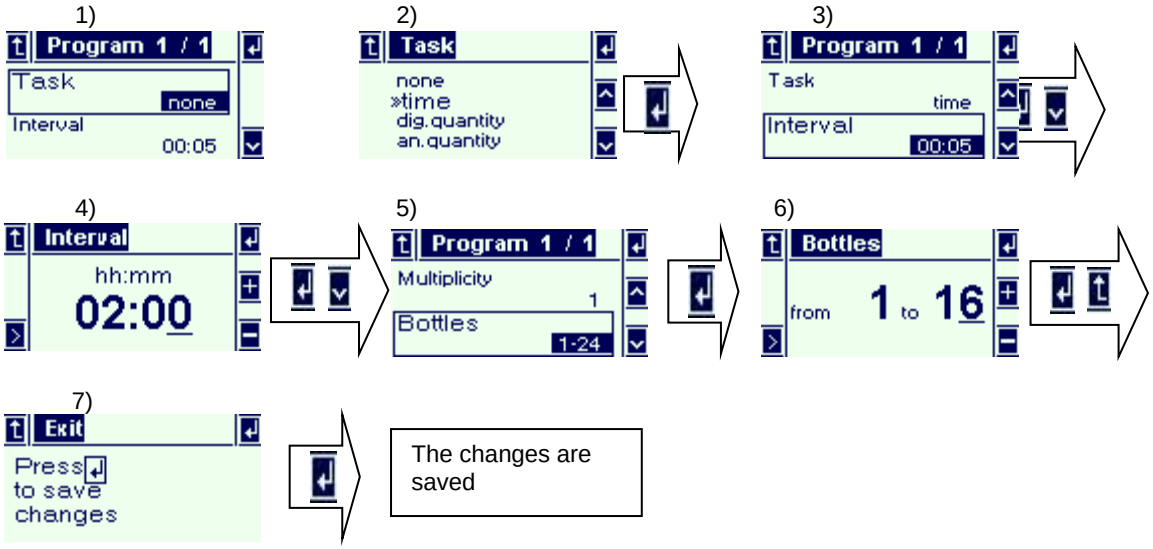

Define the programme as time (1, 2), select the desired interval (3, 4), define which bottles are to be filled with samples (5, 6) and save the new settings (7)

8 SAMPLER VIEWER – Instruction manual

The Sampler Viewer program can be used only when the sampler is equipped with the SD memory card. The files recorded on the SD card are encrypted. It is possible to view the data on the samples and temperature in the refrigerated chamber using the Sampler Viewer program.

8.1 Technical requirements

Recommended computer requirements to install the Sampler Viewer program:

- Microsoft Windows XP SP3 or Vista SP2 or 7operating system
- 100 MB free space on hard drive
- SD slot (in-built or external through USB)
- 512 MB of RAM memory
- 1GHz processor
- installed Microsoft .NET 3.5 SP1 or higher
- installed Adobe Acrobat Reader 6.0 or higher

8.2 Installation of the program

To start the installation, insert the CD and launch the application. Follow the instructions on the screen. After the successful installation you will see the following window.

8.3 Type of files on the SD card

Insert the SD card into the slot in the PC,

There are 3 types of files on the SD card:

- Alarms – filenames start with ‘a_’, the files store information about occurrence of alarms..
  An example of alarm file lines:
  `07:26; Temp. sensor error`
  a temperature sensor error occurred at 7.26

  The alarm files are text files. You can see the content using any text editor.

- Sample collections – filenames start with ‘p_’, the files store data of collected samples and analogue inputs.
- Report – filenames start with ‘r_’, the files store data on the state of all inputs and on temperature inside the sampler bottom chamber (temperature of collected samples). You can set the frequency of saving the report file in the settings menu (see 6.5.5)

The file name consists of 2 parts:

- letter which refers to the kind of file: letters a_”, „p_”, „r_”,
- date: year, month, day (format rrmmdd).

Example: file named: ‘p_090410.bin’ contains the information on the samples of 10 April 2009.

8.4 How to use the program

Start the application using the shortcut located on your desktop.

In the program window there are 4 menu tabs:

- File
  - Open – allows to open the files recorded on the SD card
  - Save as… - saves the data as text files
  - Close – closes the file currently opened
  - Exit – closes the Sampler Viewer program
- View – show different viewing options (function is available after correct file open)
- Settings – opens settings window (see point 8.4.1)
- Info – displays program version information

8.4.1 Settings of the program

The settings window is active only when no file is loaded.

There are 4 tabs:

- Basic
  Active login – the program can be launched only by the authorized person. Option active will make you enter the login and password.
- Automatically append a unit to the header of the column – in the heading there is additional information on the measured parameter

- Recording samples– this tab allows you to choose parameters that will be used to create a report from the samples files
- Continuous recording – this tab allows you to choose parameters that will be used to create a report from the report file
- Chart – this tab allows you to choose parameters that will be used to create the chart. All columns, or if the chosen column if the option *select column* is active, another window will pop-up before the chart is created . You will be allowed to choose the parameter.
- Automatically adjust the scale of axis – this option may be turned off setting your own parameter range on displayed on the chart

8.4.2 Opening the file

Choose the file in **File->Open** to create the report. You will see a similar window.

The symbol shows an incorrect value. You can get more information by placing the mouse arrow on the symbol.

You can save the data to a text file in File/**Save as.**

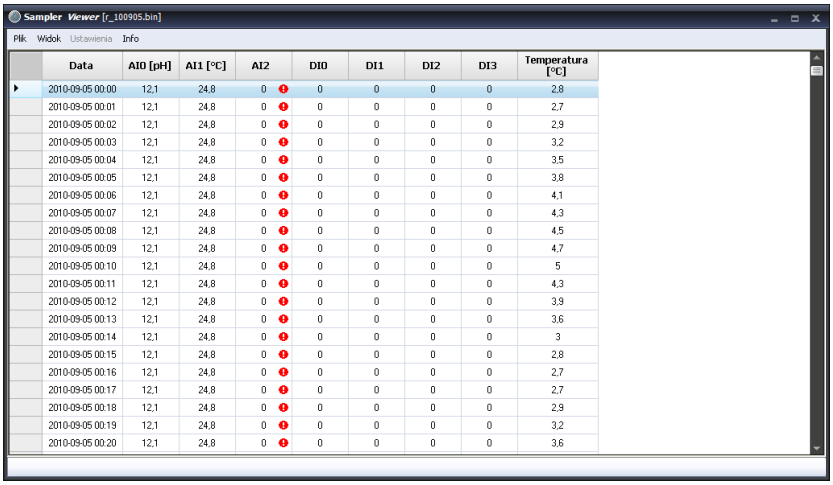

Data	AI0 [pH]	AI1 [°C]	AI2	DI0	DI1	DI2	DI3	Temperatura [°C]
2010-09-05 00:00	12,1	24,8	0	0	0	0	0	2,8
2010-09-05 00:01	12,1	24,8	0	0	0	0	0	2,7
2010-09-05 00:02	12,1	24,8	0	0	0	0	0	2,9
2010-09-05 00:03	12,1	24,8	0	0	0	0	0	3,2
2010-09-05 00:04	12,1	24,8	0	0	0	0	0	3,5
2010-09-05 00:05	12,1	24,8	0	0	0	0	0	3,8
2010-09-05 00:06	12,1	24,8	0	0	0	0	0	4,1
2010-09-05 00:07	12,1	24,8	0	0	0	0	0	4,3
2010-09-05 00:08	12,1	24,8	0	0	0	0	0	4,5
2010-09-05 00:09	12,1	24,8	0	0	0	0	0	4,7
2010-09-05 00:10	12,1	24,8	0	0	0	0	0	5
2010-09-05 00:11	12,1	24,8	0	0	0	0	0	4,3
2010-09-05 00:12	12,1	24,8	0	0	0	0	0	3,9
2010-09-05 00:13	12,1	24,8	0	0	0	0	0	3,6
2010-09-05 00:14	12,1	24,8	0	0	0	0	0	3
2010-09-05 00:15	12,1	24,8	0	0	0	0	0	2,8
2010-09-05 00:16	12,1	24,8	0	0	0	0	0	2,7
2010-09-05 00:17	12,1	24,8	0	0	0	0	0	2,7
2010-09-05 00:18	12,1	24,8	0	0	0	0	0	2,9
2010-09-05 00:19	12,1	24,8	0	0	0	0	0	3,2
2010-09-05 00:20	12,1	24,8	0	0	0	0	0	3,6

8.4.3 Creating a chart

It is possibile to create a chart from the opened file. Go to **View/Chart.**

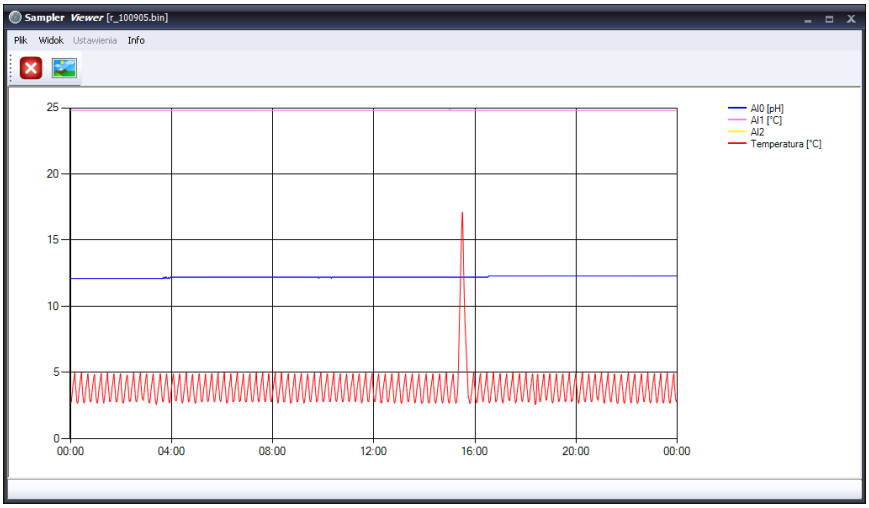

If you already set the **select column** option in **Settings / Chart** you will see a window in which you will be able to choose the parameters that will be shown in the display.

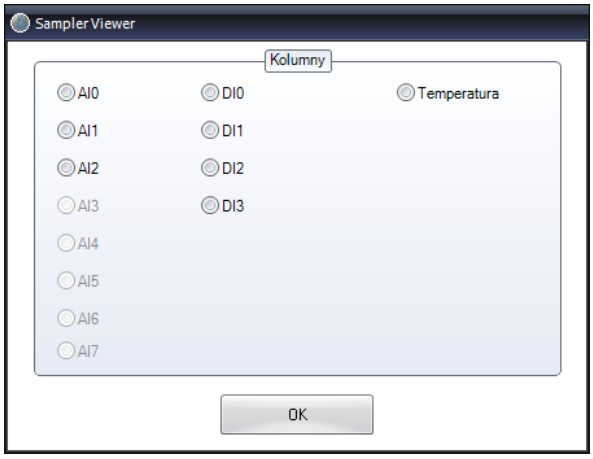

The chart can be saved as a graphic file. To do this, press the  button to save the file.

8.4.4 Creating the report

It is possible to create a report from an opened file. Go to **View/Report.** You will see a similar window.

Using the  buttons it is possible to change the pages. You may also use the mouse wheel to do this.

It is possible to save the report to PDF file using the  button or to EXCEL file using the  button.

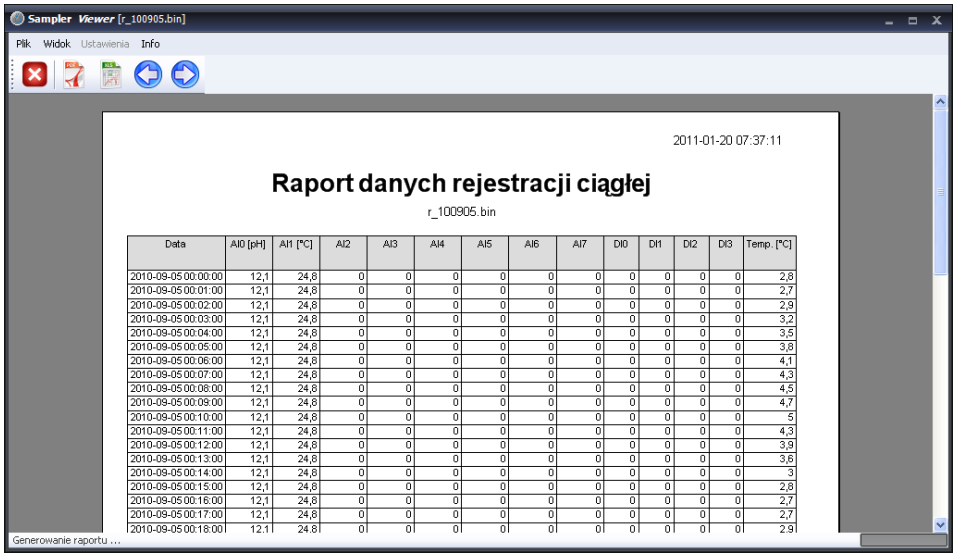

Data	AI0 [pH]	AI1 [°C]	AI2	AI3	AI4	AI5	AI6	AI7	DI0	DI1	DI2	DI3	Temp. [°C]
2010-09-05 00:00:00	12,1	24,8	0	0	0	0	0	0	0	0	0	0	2,8
2010-09-05 00:01:00	12,1	24,8	0	0	0	0	0	0	0	0	0	0	2,7
2010-09-05 00:02:00	12,1	24,8	0	0	0	0	0	0	0	0	0	0	2,9
2010-09-05 00:03:00	12,1	24,8	0	0	0	0	0	0	0	0	0	0	3,2
2010-09-05 00:04:00	12,1	24,8	0	0	0	0	0	0	0	0	0	0	3,5
2010-09-05 00:05:00	12,1	24,8	0	0	0	0	0	0	0	0	0	0	3,8
2010-09-05 00:06:00	12,1	24,8	0	0	0	0	0	0	0	0	0	0	4,1
2010-09-05 00:07:00	12,1	24,8	0	0	0	0	0	0	0	0	0	0	4,3
2010-09-05 00:08:00	12,1	24,8	0	0	0	0	0	0	0	0	0	0	4,5
2010-09-05 00:09:00	12,1	24,8	0	0	0	0	0	0	0	0	0	0	4,7
2010-09-05 00:10:00	12,1	24,8	0	0	0	0	0	0	0	0	0	0	5
2010-09-05 00:11:00	12,1	24,8	0	0	0	0	0	0	0	0	0	0	4,3
2010-09-05 00:12:00	12,1	24,8	0	0	0	0	0	0	0	0	0	0	3,9
2010-09-05 00:13:00	12,1	24,8	0	0	0	0	0	0	0	0	0	0	3,6
2010-09-05 00:14:00	12,1	24,8	0	0	0	0	0	0	0	0	0	0	3
2010-09-05 00:15:00	12,1	24,8	0	0	0	0	0	0	0	0	0	0	2,8
2010-09-05 00:16:00	12,1	24,8	0	0	0	0	0	0	0	0	0	0	2,7
2010-09-05 00:17:00	12,1	24,8	0	0	0	0	0	0	0	0	0	0	2,7
2010-09-05 00:18:00	12,1	24,8	0	0	0	0	0	0	0	0	0	0	2,9

9 CLEANING AND MAINTENANCE INSTRUCTIONS

	**Before cleaning the device, disconnect it from the power source to avoid suffering an electric shock.**

Elements in direct contact with collected samples should be cleaned periodically. They include:

- Particulate filter installed at the end of the suction hose,
- Vacuum feeder installed in the top chamber of the sampler.



Cleaning the vacuum feeder

Device can be fitted with a float to prevent damage the vacuum pump. In the electrodes are dirty program is interrupted. The display shows the message „**Clear electrodes**". After pressing the button contents of vacuum feeder is poured to the bottle, which is currently active. Status window is displayed.

Before cleaning unplug a glass vessel from the hose. Clean the electrodes (3) from dirt. After cleaning and drying the vessel, mount them on the device, remember to screw the lid tightly. Incorrectly screwed lid can cause impediments or the lack of sampling. Finally, mount the safety lock.

Cleaning the particulate filter

A dirty filter can cause disturbances during sample collection. Thus, it needs to be cleaned regularly. The frequency depends on the sampled material.

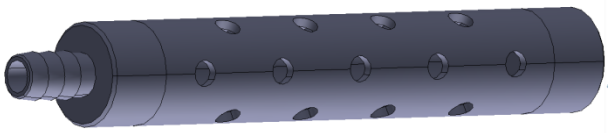

Other parts which need to be cleaned on a regular basis include:

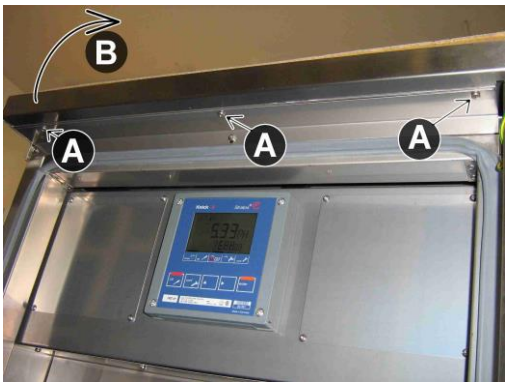

- Condenser
- Fan condenser

They are located at the back of the top chamber.

To access these parts, open the top chamber door, unscrew the 3 screws (A) with a PZ2 Phillips screwdriver, and lift the lid (B). The lid is placed on hinges installed at the back of the device.

	**Before carrying on, protect the lid from an accidental closure using provided supports which can be locked in the open position.**

Top view after cover opening.

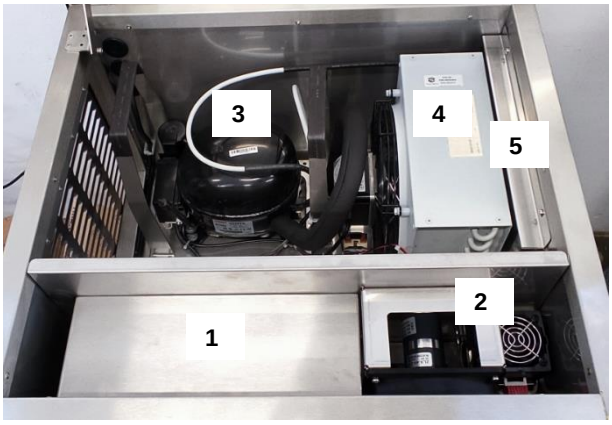

In the front part (1) there is a control panel and a vacuum or peristaltic pump (2). In the rear part there is a compressor (3) and a condenser with a fan (4).

The condenser fins (5) need to be periodically cleaned using a vacuum cleaner.

Before starting any maintenance work, it is essential to disconnect the sampler from the power source.

Cleaning should be performed depending on the needs. The periodicity of cleaning depends on the conditions in which the unit operates, the dustiness of the surrounding, etc.

Cleaning the condensate gutter of the cooling chamber

- Open the lower door of the sampler.
- Remove the dispenser tray (1) and the drawer for bottles (2).

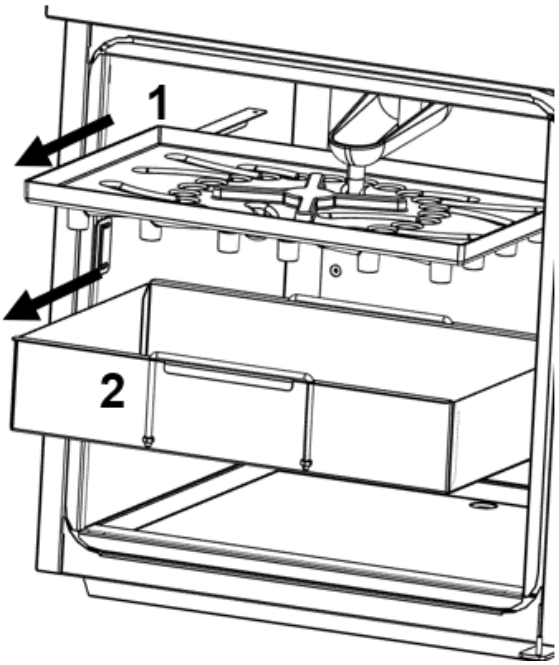

- Using a PH2 Phillips screwdriver unscrew the 4 screws and dismantle the condensate gutter of the cooling chamber.

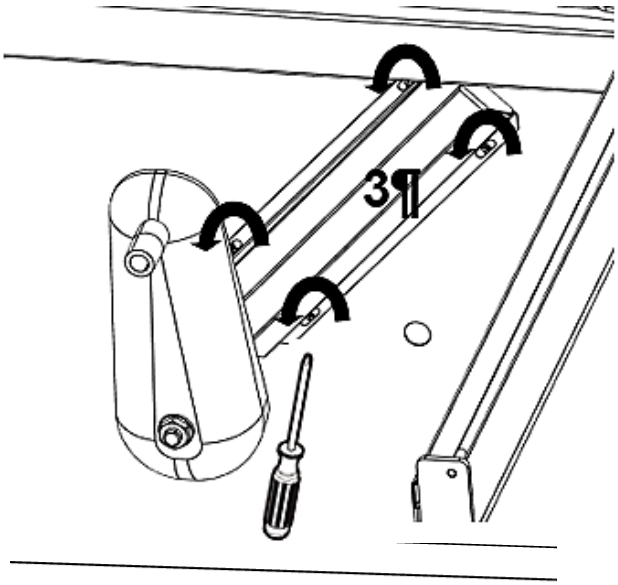

- Clean the condesate gutter of the cooling chamber.
- Carry out the assembly in the reverse order, paying attention to the correct installation of the gasket (4).

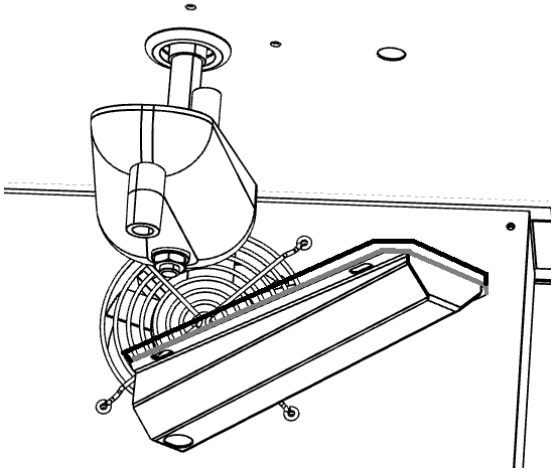

9.1 When the device is not used for a long period of time

When the device is not used for a long period of time:

- Collect several samples of clean water to clean the suction hose and other parts in direct contact with samples,
- Disconnect the power cord from the mains socket to turn off the device,
- Clean the vacuum feeder and the particulate filter, as described in 9. of this manual,
- Clean the sample bottles,
- Remove the distributor tray and the tank. Clean the interior of the bottom chamber with a damp cloth and remove any dirt from the bottom,
- Leave the bottom chamber door open to avoid unpleasant odors inside.

	**If the device is installed in an unheated room or outdoors, the device must be turned on when the ambient temperature is below 0°C. Failure to follow these recommendations may result in damage to electronic components.**

9.2 General rules for cleaning and maintenance of stainless steel

Stainless steel does not mean that the material will never corrode - it definitely does but a significantly slower than other types of steel. This steel requires regular maintenance and cleaning to prevent it from corroding over a long period of time. The corrosion resistance of stainless steel is due to the presence on the surface of very a thin oxide layer that renews itself under the influence of oxygen from the air or water and naturally creates a protective layer. Contaminants on the surface of stainless steel are a catalyst for various types of corrosion, e.g. surface corrosion, microbiological corrosion..

Despite stainless steel having natural corrosion resistance isolated cases of brown discoloration and local corrosion may occur, which can be attributed to two main reasons:

- on the surface of the steel, particles of iron may deposit from cutting, welding, or grinding carbon steel, or from the runoff rusted water from other surfaces
- the lack of cleaning leads to an increase in the concentration of chlorides or other aggressive chemicals that may lead to corrosion of the specific stainless steel grade. Seawater or splashes saturated with chloride salts used for deicing are common sources of corrosive deposits.. Under the layer of such deposits may appear small corrosive pits with a brown coating, also called as brown discolorations. Discolorations usually indicate the occurrence of corrosion in the initial stage. In such cases, simply removing the discolorations with ordinary cleaning agents is not sufficient. In small, hard to detect pits, corrosive medium may accumulate, causing new discolorations on the material's surface

In such cases, corrective surface cleaning is necessary. Unlike neutral or alkaline agents used for dirt removal, repair cleaning products are acidic. They completely and safely dissolve corrosion products, leaving the steel surface intact. The use of such agents creates a clean metallic surface of the steel, even at the microscopic level, providing optimal conditions for the natural self-repair process of stainless steel – the passivation process.

One should avoid aggressive cleaning agents and products based on chlorine and bleach, do not allow stainless steel to come into contact with non-alloy steel and avoid materials that may scratch the surface. The rough surface of steel leads to increased deposition of dirt, is also more difficult to clean and has lower corrosion resistance compared to a polished surface.

Cleaning and maintenance procedure:

- rinse off permanent dirt and contaminants with clean water, wipe the surface with a soft cloth,
- for heavier dirt, clean with a soft nylon brush using mild soap or detergent,
- after cleaning, rinse the surfaces thoroughly with clean water,
- in the case of ground steel, perform movements in the direction of grinding on the surface,
- after cleaning, wipe the surfaces dry,
- use lint-free and dust-free cloths, such as microfiber
- choose an appropriate cleaning agent and determine the cleaning frequency,
- use stainless steel care products that create additional protective layers and extend the time between cleaning cycles.

If rust occurs on the surface:

- for light rust, use household stainless steel cleaning agents containing calcium carbonate or citric acid.
- medium discoloration - clean with a 10% phosphoric acid solution. After cleaning, neutralize the acid with diluted ammonia or a mild alkaline detergent,
- for heavy rust, use products for pickling and passivation of steel, such as Pelox FR-D.
- after each cleaning operation, rinse thoroughly with clean water.

List of materials for cleaning stainless steel:

- commercially available detergents,
- vinegar and water solutions (20% to 80%), or baking soda – 2 teaspoons per liter of water,
- water with liquid soap,
- water with citric acid,
- glass cleaning fluids,
- specialized products for cleaning and polishing steel,
- brushes with natural or artificial bristles,
- microfiber cloths, chemical fiber cloths and natural fiber cloths,
- synthetic fiber scouring pads,
- sponges,
- pressure and steam washers.

9.3 Consumables

For a unit with a peristaltic pump

The delivery hose is a consumable element that is periodically replaced.

Before starting any maintenance work, it is essential to disconnect the sampler from the power source.

Replacement procedure:

	Unscrew the three knurled thumbscrews holding the head cover (do not use any tools) and remove the head cover.
	Disconnect and remove the used delivery hose from inside the head (rotating the impeller may facilitate hose removal).
	Secure the new pressure hose at the connections with a short polyamide clamp. Place the hose inside the head, taking into account its naturally bent shape. The rollers and the external contact surface of the hose can be lubricated with silicone or silicone-Teflon grease. Place the nozzles of the pressure hose in the recesses of the head body in such a way that the protrusions of the nozzle lock are in the locking slot. Close the head cover. Tighten the knurled thumbscrews (no tools required).

The lifetime of individual consumables depends on the operating conditions of the sampler, as well as on the intensity of use. Consumables are not subject to warranty replacement.

10 TROUBLESHOOTING

Below you can find a list of possible problems with the sampler together with a short description of what needs to be checked before calling the service:

Problem.	Check	Action
The sampler will not turn on	if the power cord is damaged or bent.	Replace the power cord
	if the power cord is plugged into a 230V/50Hz socket	Plug the cord into a 230V/50Hz socket
	if the power socket is live	Check the fuses in the mains
The device is not collecting samples.	if any programmes are in operation	Start sample collection (see 6.2.1).
	If the sample bottles specified for the given programme are not full	Replace the bottles (see 6.4).
The sampler is not collecting samples (audible pump operation) but the bottles are not being filled.	if the filter installed at the end of the suction hose is clean.	Remove any dirt from the filter.
	if all nuts of the vacuum feeder are tight.	Tighten the nut adjusting sample taking and the feeder lid (see 9.)
	if the suction hose is not clogged or bent.	Clean the suction hose.
	if the suction hose is not damaged.	Replace the suction hose.
	if the defined sample collection time is not too short.	Increase the sample collection time (see 6.5.2).
	if the valve is closing fully.	Adjust the pressing force of the valve (see 6.5.1).

If the sampler is still now working correctly, contact our servicing department by phone on +48 32 453 91 70, +48 32 453 91 96 or by email on serwis@pol-eko.com.pl. When reporting a fault please provide the following information regarding the machine (model, type, purchase date, installation location) and an as thorough as possible description of the problem. Providing this information will allow a quicker repair action.

10.1 List of error messages

The symbol on the status screen informs about disruption in machine operating. Pressing this button cases opening the failures and warnings window. More details within date and time of the incident are show there. Moreover the information about events are saved on SD memory card (if there is such one) in alarm files (6.3.2)

The error and warnings list can be scrolled with buttons and . After confirming reading with button information about this error is deleted from the list, but it is still recorded on the SD memory card (if there is such one in the machine) If there is an information about error , it should be confirmed (deleted from the error list) to check if it will happen again. If the incident/ error happens only once it means there is temporary disruption and it doesn't mean that the machine is operating defective.

If the same error appears again, perform the following steps depending on the kind of error:

Message	**Probable origin**
Suction error (1)	The sample has not been taken. See possible causes in 10. Change suction time (see 6.5.2) or adjust the pressing force of the valve (see 6.5.1).
Distributor error (2)	Rotary distributor inside the bottom chamber is broken. Check if the distributor's lever is not locked.
Pump failure (3)	The pump is overloaded. See if the particulate filter or the suction hose is not obstructed.
No STOP (4)	the calibration process was incorrectly performer – the button wasn't pressed and it stops sampling during calibration (6.1.1)
Power failure (7)	No power during an active sample collection programme
Valve error (8)	Probably valve is broken
Clean electrodes (9)	The vacuum feeder is dirty. Clean the vessel and the electrodes or do the recalibration of the sensor (for the machine with peristaltic pump) (point 9)
Time protection sampling (40)	During the quantitative program the sampling was taken from the time insurance
JWP error (50) (54)	Executive Unit broken
MAC error (51)	Analogue-Digital Module broken
Temp. sensor error (52)	Temperature value incorrect, temperature sensor broken
Blockade of compressor (53)	safety lock is on. It turns on when the temperature inside the bottom chamber exceeds 44°C. Open the bottom chamber to ventilate it, install roofing or move the sampler to the shade.

10.2 Exceeding the recommended ambient temperature

The unit can work in the ambient temperature range of: -20°C…+45°C.

· If the temperature exceeds 45°C, turn off the device until the ambient temperature returns to the permissible range.

· If the temperature drops below -20°C, the device should be moved to the nearest room where the ambient temperature is within the desired operating range of the device. When the unit is disconnected from the power source, proceed according to point. 9.1.

11 TECHNICAL DATA

Parameters		PP2002M
External dimensions	Height	1325mm
	Width	630mm
	Depth	660mm
Housing material		Stainless steel , 40mm thick insulation
Weight		100kg
Working conditions	Ambient temperature	-20°C - +45°C
	Power supply	AC 230V/50Hz
	Installation location	max 800m ASL
	Power consumption	450W
	The length of the power cord	5m
Sample taking	Sampling system	Vacuum or peristaltic
	Sampling height	8 meters
	Sucking hose diameter	10 mm
	Storage temperature of the samples	+4°C
Memory card (optional)	Kind of memory card	SD
	Maximum capacity	4GB
	File system	FAT 16

Parameters		PP2002+
External dimensions	Height	1070mm
	Width	630mm
	Depth	660mm
Housing material		Stainless steel , 40mm thick insulation
Weight		90kg
Working conditions	Ambient temperature	-20°C - +45°C
	Power supply	AC 230V/50Hz
	Installation location	max 800m ASL
	Power consumption	350W
	The length of the power cord	5m
Sample taking	Sampling system	vacuum
	Sampling height	8 meters
	Sucking hose diameter	13 mm
	Storage temperature of the samples	+4°C
Memory card (optional)	Kind of memory card	SD
	Maximum capacity	4GB
	File system	FAT 16

Parameters		PP2002E
External dimensions	Height	1070mm
	Width	630mm
	Depth	660mm
Housing material		Stainless steel , 40mm thick insulation
Weight		90kg
Working conditions	Ambient temperature	-20°C - +45°C
	Power supply	AC 230V/50Hz
	Installation location	max 800m ASL
	Power consumption	350W
	The length of the power cord	5m
Sample taking	Sampling system	peristaltic
	Sampling height	8 meters
	Sucking hose diameter	13 mm
	Storage temperature of the samples	+4°C
Memory card (optional)	Kind of memory card	SD
	Maximum capacity	4GB
	File system	FAT 16

12 RATING PLATE

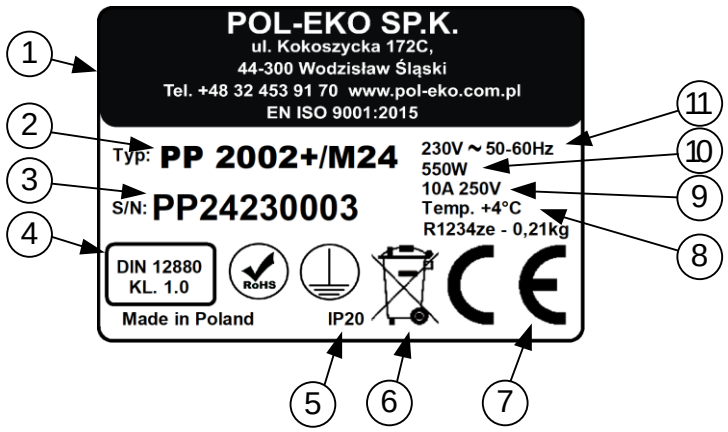

(1) Name and address of manufacturer
(2) Type of device
(3) Serial number
(4) Temperature safety device according with DIN12880
(5) Electric shock protection: protection against indirect contact and IP code
(6) Disposal of used device according with 2012/19/EU
(7) CE sign
(8) Temperature range
(9) Type of fuse
(10) Maximum power consumption, and capacity of device
(11) Voltage and Frequency of mains

13 ADDITIONAL INFORMATION

13.1 Modbus memory registry map

The rating plate is located on the left wall of the unit, in the upper left corner. Below there is a example of rating plate

<table>
<tr><th>Registry no</th><th>Description</th><th>Byte Hi</th><th>Byte Lo</th><th>Remarks</th></tr>
<tr><td>0</td><td>Current sample data</td><td>Task no</td><td>Program no</td><td></td></tr>
<tr><td>1</td><td rowspan="12">Particular bottle conditions</td><td>Bottle #1 *</td><td>Bottle #2 *</td><td rowspan="12">Meaning of particular bytes
MSB | 6 | 5 | 4 | 3 | 2 | 1 | LSB
^ Number of samples in a bottle
Bit MSB informs on the condition of a bottle. The value "1" means that the bottle is closed.
*) For device with 1 bottle: Register no1 (2 Bytes) contains information about the number of samples</td></tr>
<tr><td>2</td><td>Bottle #3</td><td>Bottle #4</td></tr>
<tr><td>3</td><td>Bottle #5</td><td>Bottle #6</td></tr>
<tr><td>4</td><td>Bottle #7</td><td>Bottle #8</td></tr>
<tr><td>5</td><td>Bottle #9</td><td>Bottle #10</td></tr>
<tr><td>6</td><td>Bottle #11</td><td>Bottle #12</td></tr>
<tr><td>7</td><td>Bottle #13</td><td>Bottle #14</td></tr>
<tr><td>8</td><td>Bottle #15</td><td>Bottle #16</td></tr>
<tr><td>9</td><td>Bottle #17</td><td>Bottle #18</td></tr>
<tr><td>10</td><td>Bottle #19</td><td>Bottle #20</td></tr>
<tr><td>11</td><td>Bottle #21</td><td>Bottle #22</td></tr>
<tr><td>12</td><td>Bottle #23</td><td>Bottle #24</td></tr>
<tr><td>13</td><td>Condition of digital outputs / inputs</td><td>Outputs</td><td>Inputs</td><td></td></tr>
<tr><td>14</td><td rowspan="8">Current power values on analogue inputs / outputs</td><td colspan="2">AIN 0</td><td rowspan="8">Power value in 0,01mA</td></tr>
<tr><td>15</td><td colspan="2">AIN 1</td></tr>
<tr><td>16</td><td colspan="2">AIN 2</td></tr>
<tr><td>17</td><td colspan="2">AIN 3</td></tr>
<tr><td>18</td><td colspan="2">AIN 4</td></tr>
<tr><td>19</td><td colspan="2">AIN 5</td></tr>
<tr><td>20</td><td colspan="2">AIN 6</td></tr>
<tr><td>21</td><td colspan="2">AIN 7</td></tr>
<tr><td>22</td><td rowspan="8">Calibration values on analogue inputs</td><td colspan="2">AIN 0</td><td rowspan="8">Calibration unit:
0,01 for pH
0,1 for °C
0,1 for mS/cm
0,1 for µS/cm
0,01 for S/cm
0,1 for m3/h
for mV (value-3000)
0,1 for g/l
no scaling for mg/l</td></tr>
<tr><td>23</td><td colspan="2">AIN 1</td></tr>
<tr><td>24</td><td colspan="2">AIN 2</td></tr>
<tr><td>25</td><td colspan="2">AIN 3</td></tr>
<tr><td>26</td><td colspan="2">AIN 4</td></tr>
<tr><td>27</td><td colspan="2">AIN 5</td></tr>
<tr><td>28</td><td colspan="2">AIN 6</td></tr>
<tr><td>29</td><td colspan="2">AIN 7</td></tr>
<tr><td>30</td><td rowspan="4">Type of calibration inputs</td><td>AIN 0</td><td>AIN 1</td><td rowspan="4">Type of calibration (byte value):
0-none; 1- pH range; 2- °C range;
3- mS/cm range; 4- µS/cm range;
5- S/cm range; 6-range m3/h;
7-mV; 8-g/l; 9-mg/l</td></tr>
<tr><td>31</td><td>AIN 2</td><td>AIN 3</td></tr>
<tr><td>32</td><td>AIN 4</td><td>AIN 5</td></tr>
<tr><td>33</td><td>AIN 6</td><td>AIN 7</td></tr>
<tr><td>34</td><td rowspan="10">Registered errors</td><td>Code #1</td><td>Code #2</td><td rowspan="10">Description of errors (byte value):
1-water suck error; 2-distributor calibration error; 3-pump failure;
4-no STOP signal during calibration;
5-hose rinsing error; 7-power failure during program's run; 8-drain valve calibration error; 9,10-clean electrodes; 50, 54- no JWP communication; 51-no MAC communication; 52-temperature sensor error; 53-compressor blockade (temperature in chamber >44°C)</td></tr>
<tr><td>35</td><td>Code #2</td><td>Code #4</td></tr>
<tr><td>36</td><td>Code #3</td><td>Code #6</td></tr>
<tr><td>37</td><td>Code #4</td><td>Code #8</td></tr>
<tr><td>38</td><td>Code #5</td><td>Code#10</td></tr>
<tr><td>39</td><td>Code #6</td><td>Code #12</td></tr>
<tr><td>40</td><td>Code #7</td><td>Code #14</td></tr>
<tr><td>41</td><td>Code #8</td><td>Code #16</td></tr>
<tr><td>42</td><td>Code #9</td><td>Code #18</td></tr>
<tr><td>43</td><td>Code #10</td><td>Code #20</td></tr>
<tr><td>44</td><td colspan="4">CRC errors counter</td></tr>
<tr><td>45</td><td colspan="3">Temperature in the sample chamber</td><td>The value is multiplied by 10 and is sent as signed integer</td></tr>
</table>

13.2 Connection diagram

13.2.1 Block diagram

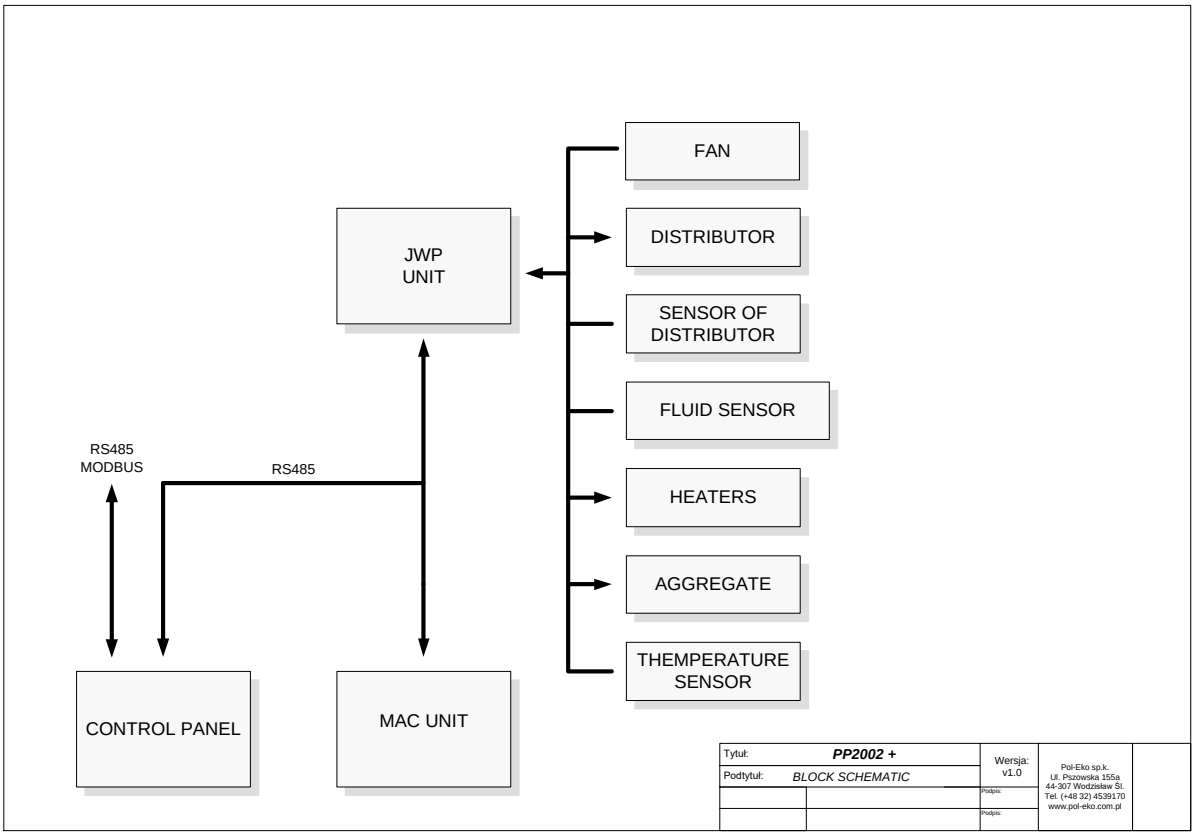

13.2.2 Electric diagram

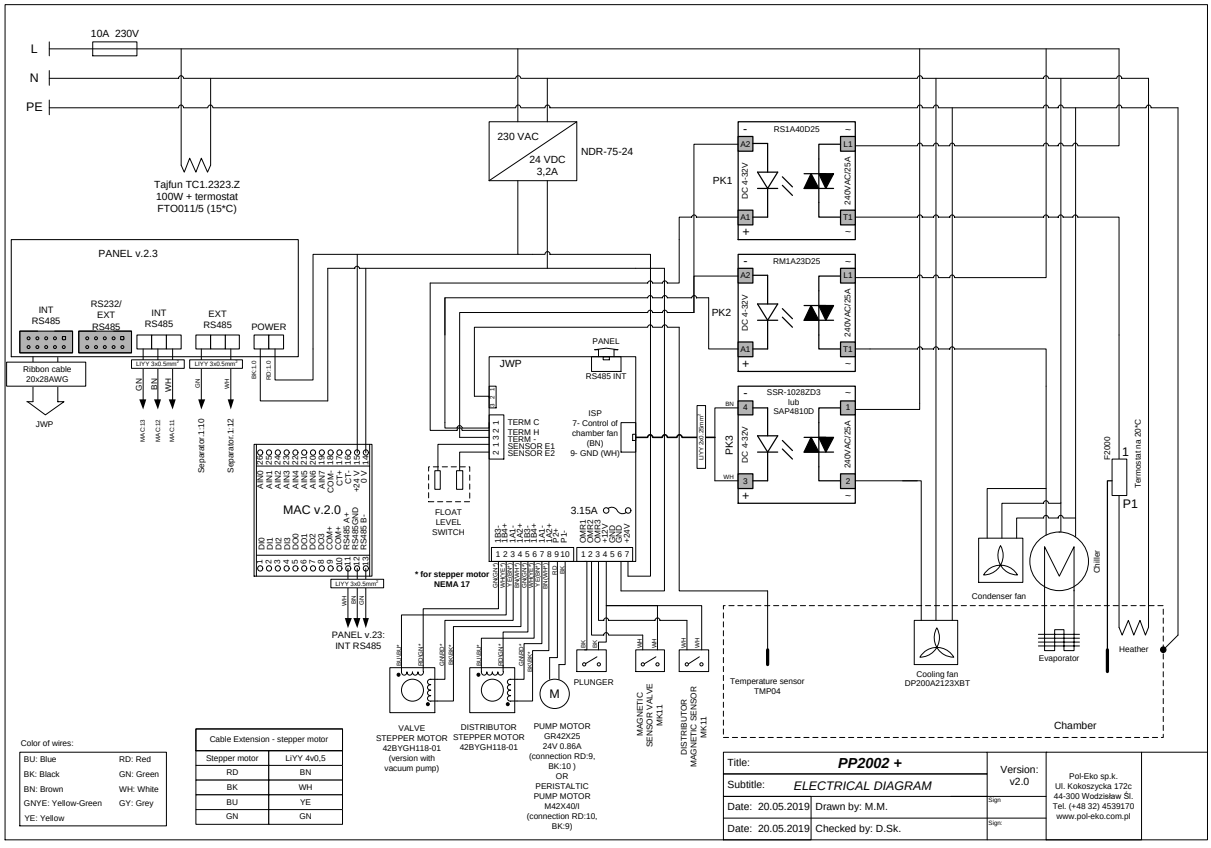

13.2.3 Clamp connections

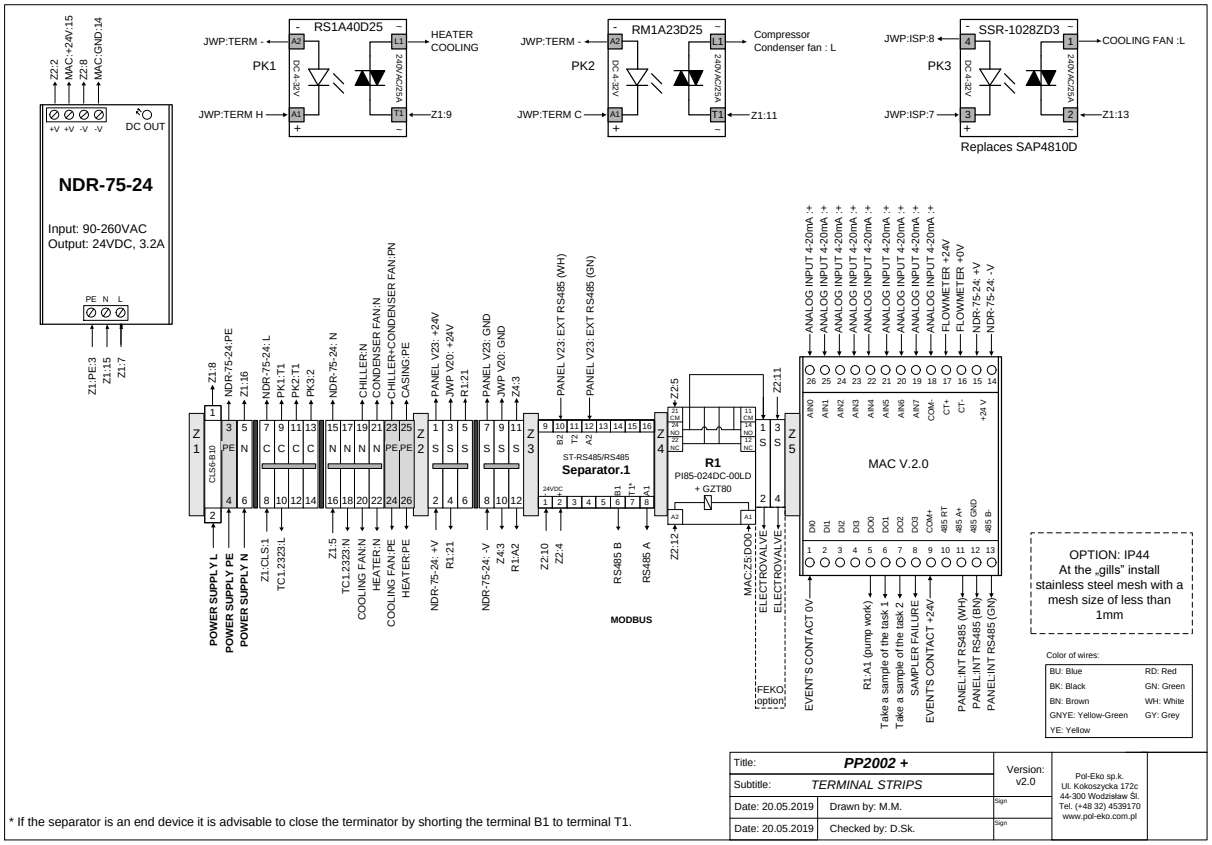

* If the separator is an end device it is advisable to close the terminator by shorting the terminal B1 to terminal T1.

Inside the unit, there are some clamps that allow the user to connect additional meters or additional data outputs.

DO0… DO3 outputs are adapter to communicate with POL-EKO waste water Reception stations 'FEKO'. However, they may be used for other purposes, e.g. taking the samples from 2 different sources.

DO0 … DO3 meaning:

Output	Signal description
DOUT0	Pump operation
DOUT1	Sample taking – task 1
DOUT2	Sample taking - task 2
DOUT3	Unconfirmed sampler error

14 WARRANTY

Warranty conditions shall be subject to Polish law

Support form and warranty conditions are specified on the manufacturer's website:

http://www.pol-eko.com.pl/en/service

Warranty repairs have to be reported to:

POL-EKO A.Polok-Kowalska Sp.k.
ul. Kokoszycka 172 C
44-300 Wodzisław Śl.

Tel:
+48 32 453 91 96
+48 32 453 91 70
+48 32 453 90 30

E-mail:
export.service@pol-eko.com.pl

15 TECHNICAL DRAWINGS

15.1 PP2002+

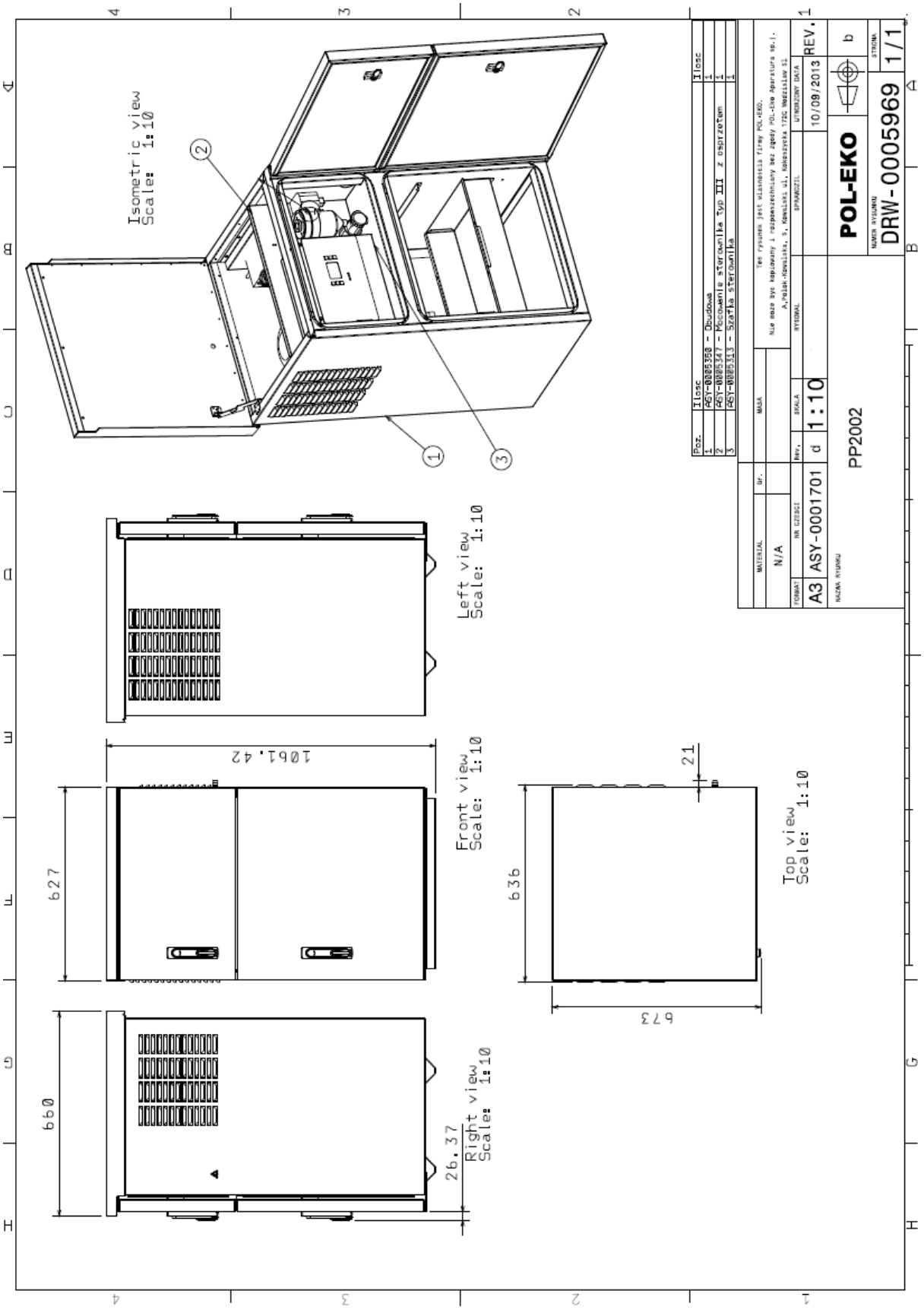

15.2 PP2002E

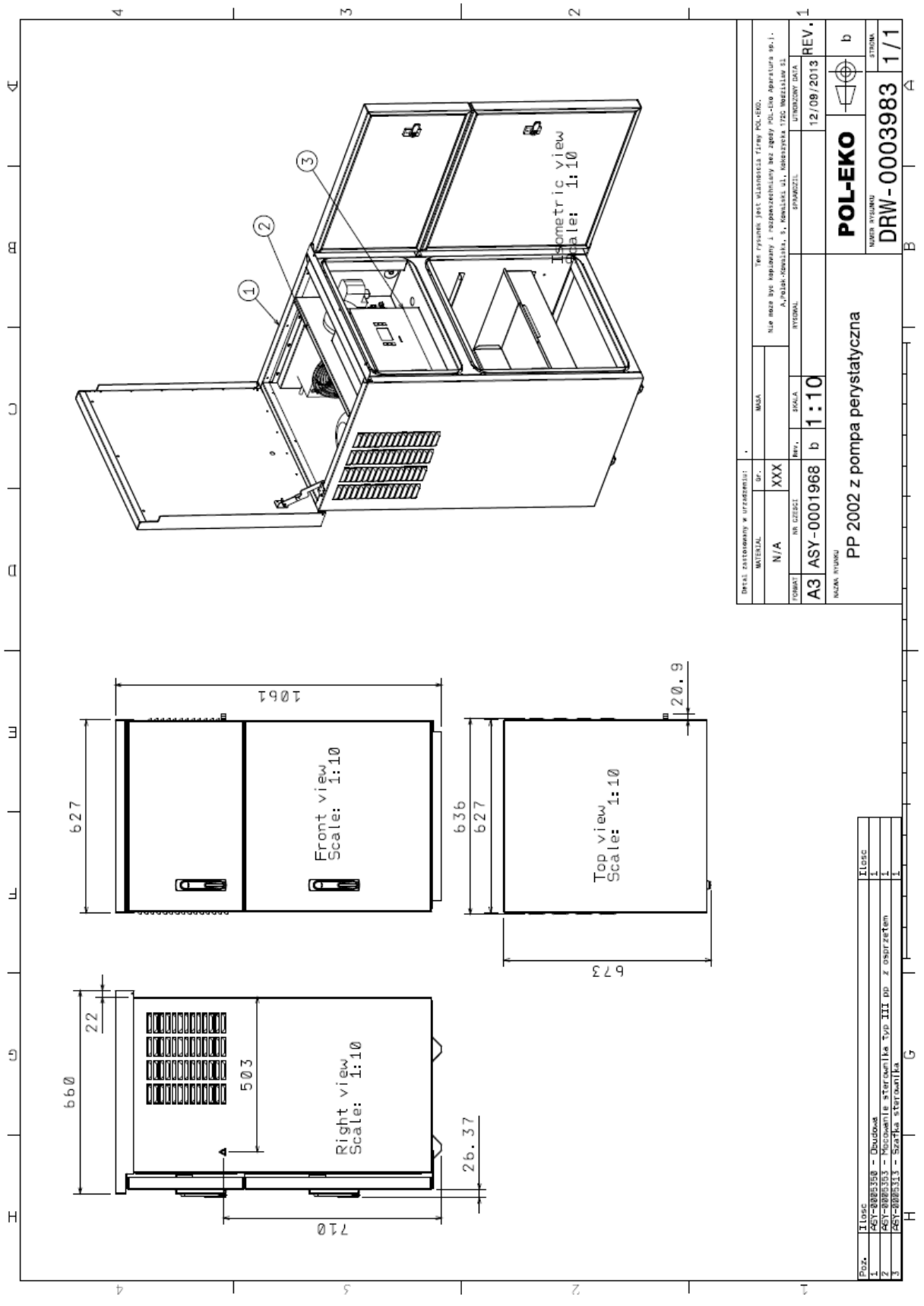
Isometric view
Scale: 1:10
Front view
Scale: 1:10
Top view
Scale: 1:10
Right view
Scale: 1:10
1061
627
636
627
20.9
673
660
22
503
710
26.37
POL-EKO
PP 2002 z pompa perystaltyczna
DRW-0003983
A3
ASY-0001968
1:10
12/09/2013
Poz.
Ilosc
1 ASY-0005350 - Obudowa 1
2 ASY-0005353 - Mocowanie sterownika typ III pp z osprzętem 1
3 ASY-0005313 - Szafka sterownika 1

15.3 PP2002M

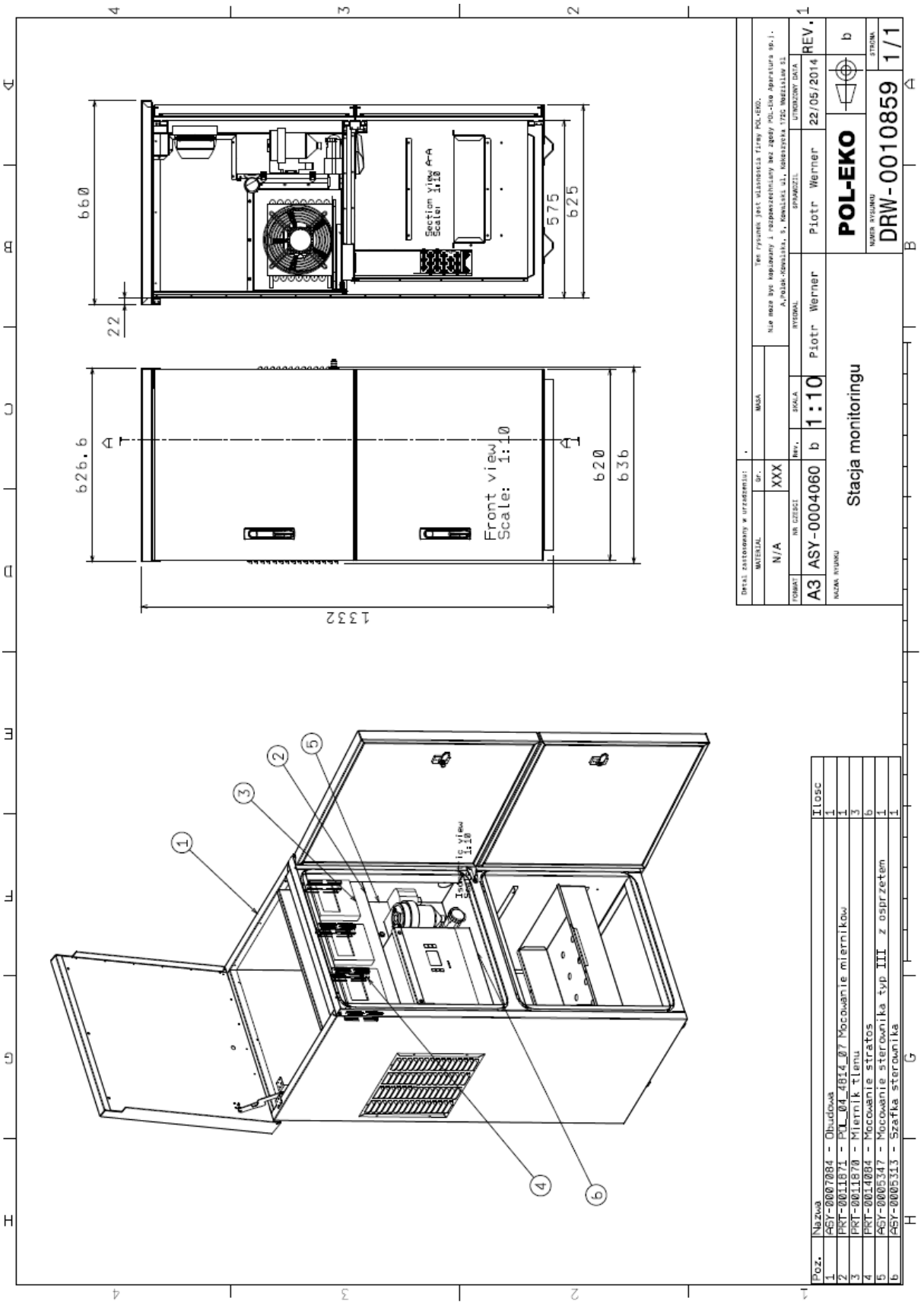
660
22
575
625
Section view A-A
Scale: 1:10
626.6
620
636
Front view
Scale: 1:10
1332
Isometric view
Scale: 1:10
Poz. Nazwa Ilosc
1 ASY-0007084 - Obudowa 1
2 PRT-0011871 - POL_04_4814_07 Mocowanie miernikow 1
3 PRT-0011870 - Miernik tlenu 3
4 PRT-0014084 - Mocowanie stratos 6
5 ASY-0005347 - Mocowanie sterownika typ III z osprzetem 1
6 ASY-0005313 - Szafka sterownika 1
Detal zastosowany w urzadzeniu:
MATERIAL N/A
Gr. XXX
MASA
FORMAT A3
NR CZESCI ASY-0004060
Rev. b
SKALA 1:10
RYSOWAL Piotr Werner
SPRAWDZIL Piotr Werner
UTWORZONY DATA 22/05/2014
REV. b
NAZWA RYSUNKU Stacja monitoringu
NUMER RYSUNKU DRW-0010859
STRONA 1/1
POL-EKO

16 DECLARATION OF CONFORMITY

CE

DEKLARACJA ZGODNOŚCI UE

EU DECLARATION OF CONFORMITY

POL-EKO

Produkt:		***Product:***
Stacjonarny aparat do poboru prób		*Stationary sampler*
Model: (*Model:*)		
PP 2002+	PP 2002E	PP 2002M
w wersjach:(*in version:*)		
próżniowo-ciśnieniowy (*vacuum system*)	pompa perystaltyczna (*peristaltic pump*)	próżniowo-ciśnieniowy; pompa perystaltyczna (*vacuum system; peristaltic pump*)
Nazwa i adres producenta:		***Name and address of the manufacturer:***
POL-EKO A.Polok-Kowalska sp.k. ul. Kokoszycka 172 C, 44-300 Wodzisław Śląski Polska/Poland		
Niniejsza deklaracja zgodności wydana zostaje na wyłączną odpowiedzialność producenta.		***This declaration of conformity is issued under the sole responsibility of the manufacturer.***
Wymieniony powyżej przedmiot niniejszej deklaracji jest zgodny z odnośnymi wymaganiami unijnego prawodawstwa harmonizacyjnego:		***The object of the declaration described above is in conformity with the relevant Union harmonisation legislation:***
LVD 2014/35/UE EMC 2014/30/UE RoHS 2011/65/UE WEEE 2012/19/UE		LVD 2014/35/EU EMC 2014/30/EU RoHS 2011/65/EU WEEE 2012/19/EU
Odniesienia do odnośnych norm zharmonizowanych, które zastosowano lub do innych specyfikacji technicznych, w stosunku, do których deklarowana jest zgodność:		***References to the relevant harmonised standards used or references to the other technical specifications in relation to which conformity is declared:***
LVD		PN-EN 61010-1:2011 PN-EN 60529:2003/A2:2014-07
EMC		PN-EN IEC 61326-1:2021-10
RoHS		PN-EN IEC 63000:2019-01
Inne *(other)*		PN-EN 16479:2014-12 PN-ISO 5667-10:2021-11

Wodzisław Śl. 08.04.2024

Podpis / Signature:

Dawid Rybarz
Dyrektor Techniczny (CTO)

Producer of basic and indispensable laboratory equipment
as well as continuous measurement equipment.
Authorized dealer of:
Knick, Thermo Scientific, WTW

POL-EKO
A. Polok-Kowalska sp.k.
ul. Kokoszycka 172 C
44-300 Wodzislaw Slaski, Poland
Tel. +48 / 32 453 91 70, Fax. +48 / 32 453 91 85

e-mail: info@pol-eko.com.pl
web: https://www.pol-eko.com.pl * https://www.cieplarki.pl

We produce:
- thermostatic cabinets
- refrigerators
- laboratory freezers
- heating ovens
- cooled incubators
- drying ovens
- colony counters
- stationary samplers
- specialized devices for controlled sewage and waste waters taking

We organize:
- trainings
- seminaries

We provide:
- warranty service
- post–warranty service

We offer portable, laboratory and on-line equipment:
- pH-meters
- ISE measuring
- dissolved oxygen meters
- conductivity meters
- photometers
- spectrophotometers
- thermo reactors
- turbidity meters
- heavy metals trace analyzers
- pH electrodes
- conductivity sensors
- D.O. sensors
- pH buffer solutions
- conductivity standards
- photometric tests
- chromatography syringes
- laboratory accessories

We advise our customers as far as the choice
and maintenance of the equipment are concerned !